TURBOSMART®

Engineered to WIN

MESSAGE FROM THE CEO

Thank you for picking up the latest Turbosmart catalogue. As we look back on 22 fantastic years of innovation and growth, we continue to look towards the future, as we release some revolutionary new products that will cement our reputation as an innovator and market leader.

Over the last 18 months we have launched the completely new range of GEN-V External Wastegates, Kompact EM Blow-Off Valves and Anti-Lag Valve for motorsports applications. I'm happy to say that these products have won a total of ten SEMA global media awards between them and our Kompact EM BOV was awarded the coveted SEMA New Product Award for Performance-Street 2019. This is something that we are extremely proud and humbled by, as we are so passionate about the industry and helping our customers.

It's hard for me to believe how far Turbosmart has come in its twenty two years of manufacturing. Back in 1997, we started as a two man team, hand building Blow-Off Valves and boost controllers in our spare time. Today, we have a large, modern manufacturing facility, fitted out with state of the art machinery, and our dedicated team spans across all corners of the globe. Our ever-growing offices in Australia, USA and the UK have allowed us to develop a truly global range of products, bringing the Turbosmart brand to more people in more places than ever before. Some things have remained the same, though - we still proudly manufacture all our products in house, we still have motorsport and performance in our blood, and we are still focused on continuous improvement, so we remain at the top of our game.

I want to give a sincere thank you to our loyal customers, business partners, sponsored drivers and anyone who has helped Turbosmart along the way over the years. Whether you've been there with us since the start, or only just joined us, we couldn't have done it without you. So thank you for coming with us on this journey.

CONTENTS

ANTI-LAG VALVE 2
BLOW-OFF VALVES 3
- Kompact 3
- Kompact EM Series 4
- Type 5 BOVs 5
- Dual Port 5
- Plumb Back 6
- Supersonic 6
- Vee-Port Pro 6
- Smart Port 7
- Big Bubba 7
- Gen-V Race Port 8
- Power Port 8

WASTEGATES 9
- Ultra-Gate38 9
- Comp-Gate40 10
- Hyper-Gate45 10
- Pro-Gate50 11
- Power-Gate60 11
- Gen-V Sensor Caps 12
- Gen-V Spares and Accessories 12
- HP Wastegates 12

INTERNAL WASTEGATES 13
- What is an Internal Wastegate 13
- High Pressure Internal Wastegate Actuator 13
- Twin Port Actuator 13

BORG WARNER EFR SERIES TURBO ACCESSORY FITMENT GUIDE 14
FUEL MANAGEMENT 15
- Fuel Pressure Regulators 15
- FPR800 15
- FPR1200 15
- FPR2000 15
- Fuel Filters 16
- Fuel Rail Adapters 16

BOOST CONTROL 17
- Manual Boost Controllers 17
- Manual Boost Controllers Parts and Accessories 17
- Electronic Boost Controllers 18
- e-Boost2 18
- e-BoostHP 18
- e-Boost Street 19
- Electronic Boost Controller Parts and Accessories 19
- Gauges 20
- Boost Reference Adapters 21
- Fuel Cut Defenders 21

OIL MANAGEMENT 22
- (OPR) Turbo Oil Pressure Regulator 22
- Turbo Oil Feed Filters 22
- Turbo Drain Adapters 22

SILICONE HOSE 23
- Straight Hose Pre Cut Length 23
- Straight Hose Full Length 23
- Silicone Tees 23
- 90 Degree Elbows 24
- 45 Degree Elbows 24
- Reinforced Hump Hoses 23
- Straight Reducers 25
- 90 Degree Elbow Reducers 25
- 45 Degree Elbow Reducers 25
- Vacuum Hose 26
- Reinforced Vacuum Hose 26
- Murray Turbo Seals Series Constant Tension Clamps 26

ANTI-LAG VALVE

The all-new addition to the Turbosmart line-up is the fresh air ALV40 (Anti-Lag Valve) for motorsport applications. Featuring a 40mm valve diameter and a purpose designed actuator housing. Multiple fittings are also supplied for ease of fitment and fabrication.

The fresh air valve allows for incoming charged fresh air from the turbo to be diverted safely into the exhaust manifold pre-turbine wheel with the throttle at low opening angles to allow for safer spooling of the turbocharger without the potentially damaging throttle based late combustion event style anti-lag that can induce high engine stresses and break connecting rods.

The ALV is a sealed twin chamber design with the top port being the primary control port, the spring is designed to open under vacuum conditions to allow for the air to bypass into the exhaust manifold, the lower chamber for twin port control methods, to control the valve irrespective of manifold pressure and shaft seal allows for leak proof operation.

Included in Box:

- Turbosmart Gen-V ALV
- Valve Seat
- Inlet V-band Clamp
- Inlet Hose Adapter 1-1/2" OD
- Outlet V-Band Clamp
- Inlet Weld Flange 1-1/2" OD
- Collar Tool
- Fitting Kit
- Inlet O-ring

** Due to the variety of engine applications, an outlet weld flange is required to be purchased separately:*

5 cylinder: TS-0550-3104 ALV 5-1 Weld Flange (5 outlet)

4 cylinder/V8: TS-0550-3098 ALV 4-1 Weld flange (4 outlet)

3 cylinder/6 cylinder: TS-0550-3099 ALV 3-1 Weld flange (3 outlet)

2 cylinder: TS-0550-3100 ALV 2-1 Weld flange (2 outlet)

For custom outlet plenums, use Single Outlet to allow for fabrication of your own solution: TS-0550-3101 ALV 1-1 Weld Flange (1 outlet)

ANTI-LAG VALVE PART NUMBERS	
TS-0552-1402	Gen-V ALV40 - Black
TS-0550-3104	ALV 5-1 Weld Flange (5 outlet)*
TS-0550-3098	ALV 4-1 Weld flange (4 outlet)*
TS-0550-3099	ALV 3-1 Weld flange (3 outlet)*
TS-0550-3100	ALV 2-1 Weld flange (2 outlet)*
TS-0550-3101	ALV 1-1 Weld Flange (1 outlet)*
TS-0550-3102	1-3/4" OD inlet pipe adapter

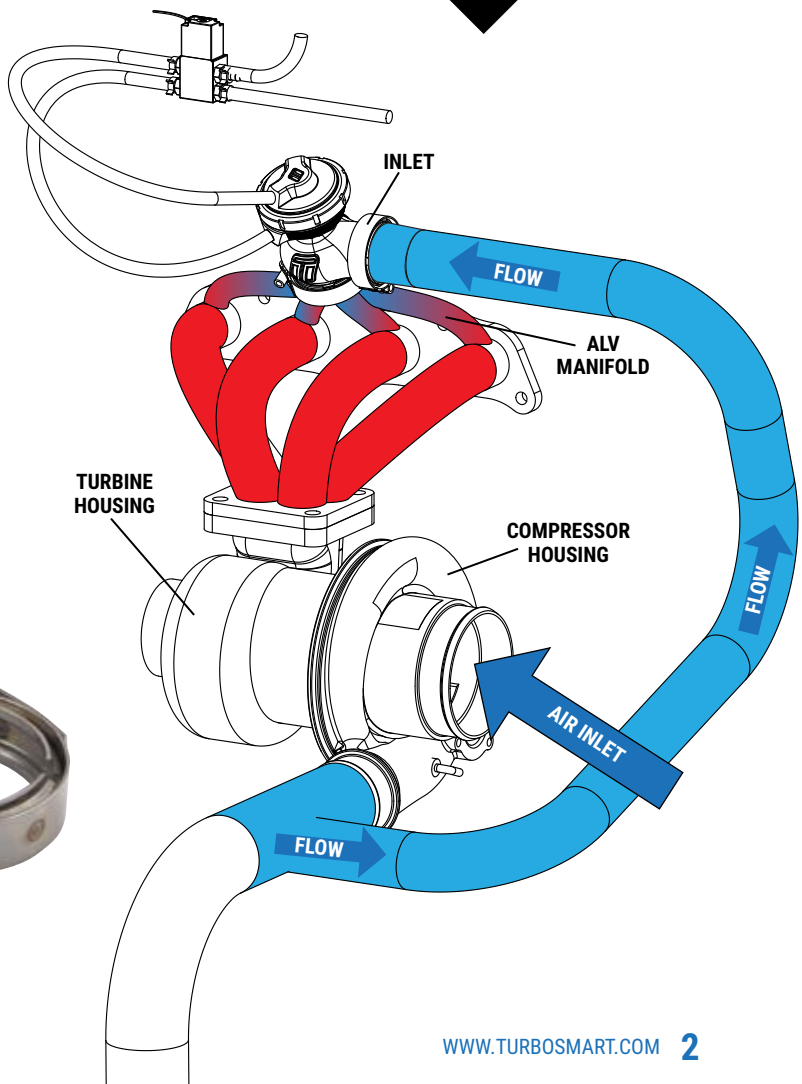

TS-0550-3098

SELECTING THE RIGHT BLOW-OFF VALVE - WHAT IS THE CORRECT BOV FOR MY CAR?

Turbosmart Blow-Off Valves are manufactured with a focus on performance and reliability. The Turbosmart range are made from tough and durable billet aluminium and include many innovative features like the billet V-band clamp for fast and reliable installation. Turbosmart BOVs have big flow capabilities while being small in size and light in weight. Depending on your engine, HP and budget, we recommend selecting the biggest BOV possible. Below is a quick guide:

BLOW-OFF VALVE	WHEEL HP RATING	PISTON/VALVE DIAMETER	
KOMPACT/KOMPACT EM BOV	Up to 400	28mm	1”
TYPE 5/SMART PORT	Up to 600	38.1mm	1.5”
BIG BUBBA	Up to 1500	50.8mm	2”
RACE PORT	Up to 2500	50.8mm	2”
POWER PORT	Up to 3000+	63.5mm	2.5”

KOMPACT - HEAVY DUTY OEM UPGRADE (UP TO 400 HP)

Turbosmart’s billet construction Kompact range has been designed as a bullet-proof replacement for OEM parts. Our focus on quality materials, design & construction gives the Kompact range a performance edge in boost handling capacity, reliability & response, whilst being competitively priced. They will not leak or burst under increased pressure.

Each Kompact Blow-Off Valve features a tolerance-matched piston and body, which ensures a precise fit between the moving parts, eliminating the need for a body to piston o-ring seal. Thus, providing excellent piston response and reliability over other designs. An o-ring seal is installed at the base of the piston, where it is most needed, to provide a positive seal against boost pressure and remove the possibility of false knock.

Kompact Blow-Off Valves are available in two different styles:

PLUMB BACK - Full time recirculating

DUAL PORT - Half vent to atmosphere, half recirculating. The best of both worlds!

Universal and flange type Kompact Dual Ports are supplied with a blanking plug to make full vent to atmosphere or recirculate full time.

The Kompact range features:

- A stealthy black finish, to blend in with any engine bay
- A range of inlet options including hose fittings, two bolt flange, and the new two and three bolt-flange for turbo compressor cover fitment

A range of vehicle specific applications including early VAG (Volkswagen and Audi), EcoBoost, Borg Warner, Subaru, BMW, Mitsubishi, Nissan, Honda, Kia and new applications for Honda Civic Type R, Kia Stinger, Subaru MY15 WRX, Mitsubishi Evo IV to X, Mercedes Benz C63 AMG (W205), and Hyundai Veloster Turbo.

SEE OUR WEBSITE FOR MANY MORE LISTINGS ON THE ITEMS BELOW

PART # DUAL PORT	PART # PLUMB BACK	DISPLAY NAME
TS-0203-1021	TS-0203-1221	Universal - 20mm
TS-0203-1022	TS-0203-1222	Universal - 25mm - Replaces all Bosch 25mm Plastic and more
TS-0203-1023	TS-0203-1223	Universal - 34mm - Replaces all Mitsubishi EVO 4-10 and more
TS-0203-1037		Subaru WRX 2015+ Forester XT 2014+ (FA20 Engine) - Smart Port BOV
TS-0203-1010	TS-0203-1210	Subaru WRX 2008-14/Forester XT 2008-2013/Legacy GT 2003-2008/ Nissan Juke & Pulsar SSS 1.6
TS-0203-1015	TS-0203-1215	Subaru - WRX 2001-2007 / WRX Sti 2001+/Forester XT 2005-2007 WRX 2008-14
TS-0203-1016		Subaru WRX MY98-00/Forester MY99
TS-0203-1061	TS-0203-1261	Ford Focus ST / F150 Ecoboost 2015 / Borg Warner EFR
TS-0203-1081	TS-0203-1281	Ford Mustang 2015+ Ecoboost
TS-0203-1064	TS-0203-1264	Ford Focus RS 2016 2.3L Ecoboost
TS-0203-1065	TS-0203-1265	Ford 1L Ecoboost
TS-0203-1026	TS-0203-1226	Nissan GTR R32/R33/R34 Requires 2 BOV's / R32/R33/R34 GTS-T Requires 1 BOV / Stagea 1996/2007
TS-0203-1009	TS-0203-1209	Mazdaspeed 3+6 / CX7 2.3L
TS-0203-1050	TS-0203-1250	BMW N54 engine
TS-0203-1052	TS-0203-1252	Mini R56 1.6T
TS-0203-1057	TS-0203-1257	Renault Clio RS200 2014+
TS-0203-1062	TS-0203-1262	Mercedes A45 AMG Series 1 2013-07.2015
TS-0203-1036		Hyundai i30N 2018+ Veloster N 2019+
TS-0203-1031	TS-0203-1231	Hyundai Veloster Turbo 2012-2018
TS-0203-1008		Cadillac ATS-V LF4 2016-2019
TS-0203-1017		Honda Civic Type R/RS/Si 2016+
TS-0203-1025		KIA Stinger/Genesis G80 3.3L V6

TS-0203-1261
Ford Focus ST / F150 Ecoboost 2015 / Borg Warner EFR

TS-0203-1061
Ford Focus ST / F150 Ecoboost 2015 / Borg Warner EFR

Universal Dual Port

Universal Plumb Back

TS-0203-1025
Kia Stinger

TS-0203-1210 Subaru

TS-0203-1036
Hyundai i30N 2018+ Veloster N 2019+

TS-0203-1017
Honda Civic Type R/RS/Si

KOMPACT EM SERIES *(PATENT PENDING)*

- HEAVY DUTY OEM UPGRADE / ELECTRONIC CONTROL (UP TO 400 HP)

The award-winning Kompact EM series Blow-Off Valves, are the world's first truly plug and play Blow-Off Valves. Simply unplug and unbolt your OEM Blow-Off Valve, and install ours in its place. No adapters, hoses or extra assembly required. All this while retaining complete OE control of the BOV's operation.

Turbocharger performance is increased due to minimising leakage, rapid response, coupled with superior thermal performance thanks to our world-leading engineering and simulation abilities.

A must-have for hybrid or larger flowing turbos that utilise OE electronic diverter valve by not leaking, the EM will achieve target boost without stressing the turbo charger and wastegate

Dual Port vents both to the atmosphere and back into the air intake.

Key Features Include:

- Patent pending integrated pressure control
- True plug and play upgrade
- Integrated proprietary high-temperature solenoid valve
- Billet construction with high-temperature o-rings
- Available in plumb back or dual port options

The Universal Kompact EM allows for remote mounting of a higher flowing BOV than the shortie, but allows the option to utilise the OE diverter valve function for complete OE integration allowing for larger turbo kits and not compromising diverter valve functionality or performance, while still maintaining the added benefits of upgrading to a leak proof, high boost handling diverter valve.

UNIVERSAL KOMPACT EM DUAL PORT

BEST NEW PERFORMANCE STREET PRODUCT 2019

KOMPACT EM BOLT-ON APPLICATIONS - SEE OUR WEBSITE FOR DETAILED LISTINGS ON THE ITEMS BELOW

PART # DUAL PORT	PART # PLUMB BACK	DISPLAY NAME
TS-0223-1063	TS-0223-1263	VR1 - Suits VW/Audi/Seat/Skoda 2.0L/1.8/1.4 TFSI + more
TS-0223-1066	TS-0223-1266	VR2 - Suits Ford EcoBoost, Mercedes, AMG, Volvo + more
TS-0223-1086	TS-0223-1286	VR3 - Suits Fiat/Alfa Romeo/Lancia
TS-0223-1091	TS-0223-1291	VR4 - Suits VW/Audi/Seat/Skoda 1.4 TSI
TS-0223-1087	TS-0223-1287	VR7 - Chev Camaro,Cadillac ATS/CTS/CT6, Holden Commodore ZB + more
TS-0223-1075	TS-0223-1275	EM Universal - 25mm - Suits Non compressor cover mounted ECU install
TS-0223-1096	TS-0223-1296	VR13 - Ford Ranger 2019+ EcoBoost 2.3L

VR1 DUAL PORT

VR2 PLUMB BACK

VR4 DUAL PORT

If replacing an OE compressor cover diverter valve - like our **Universal Kompact EM**, be sure to correctly blank off the original diverter valve aperture with our blanking plates.

KOMPACT BLANKING PLATES PART NUMBER	
TS-0203-2002	Borg Warner EFR, KKK and Ecoboost Turbochargers BOV Blanking Plate
TS-0203-1101	Focus RS 2016 2.3L BOV Blanking Plate
TS-0203-1103	Mini R56 BOV Blanking Plate
TS-0203-1102	Mustang/Fiesta BOV Blanking Plate
TS-0203-1106	Ford Ecoboost 1.0L BOV Blanking Plate

TYPE 5 BOVS & BPVS - HIGH PERFORMANCE / OEM UPGRADE / CUSTOM BUILDS (UP TO 600 HP)

The Type 5 line is Turbosmart's most popular range. The Type 5 38mm/1.5in valve has been designed for high flow and performance. Type 5 valves are well suited for both street vehicles and race machines. The Type 5 line features:

Clever modular design – all Type 5 Blow-Off Valves are simple to take apart and modify. Want to turn your vent to atmosphere Blow-Off Valve into a plumb back valve? It can be done in a matter of minutes! Trumpets can be unscrewed and swapped for blanking plugs and hose fittings, or back the other way. Likewise inlet flanges, hose fittings and V-band fittings, are all interchangeable

Precision machining and assembly – Each Type 5 Blow-Off Valve features a tolerance-matched piston and body, which ensures a precise fit between the moving parts, eliminating the need for a body to piston o-ring seal. Thus, providing excellent piston response and reliability over other designs. An o-ring seal is installed at the base of the piston, where it is most needed, to provide a positive seal against boost pressure and remove the possibility of false knock.

Type 5 Blow-Off Valves are available in three different styles:

PLUMB BACK - Full time recirculating

DUAL PORT - Half vent to atmosphere, half recirculating. The best of both worlds! Dual Ports also have blanking plug supplied to make full vent to atmosphere or full time recirculating

SUPERSONIC - Full vent to atmosphere

DUAL PORT - HIGH PERFORMANCE / CUSTOM BUILDS (UP TO 600 HP)

Proof you can have the best of both worlds. The Dual Port is a 50-50 recirculating and vent to atmosphere BOV. Offers quiet operation on low boost, avoiding unwanted attention, but vents to atmosphere on high boost for that sought-after Blow-Off Valve sound.

- Quiet operation on low boost, classic Turbosmart BOV noise and full performance on high boost
- Features one plumb-back port to route to the vehicle's intake, and one vent to atmosphere trumpet
- Modular design, supplied with an additional trumpet and blanking plug to allow the valve to be easily transformed into a Supersonic, Plumb Back, or Megasonic

See our website for many more listings on the Type 5 range

PART# DUAL PORT BLACK	PART# DUAL PORT BLUE	DISPLAY NAME
TS-0205-1062	TS-0205-1061	Dual Port Universal 32mm
TS-0205-1072	TS-0205-1071	Dual Port Universal 38mm
TS-0205-1010	TS-0205-1009	Subaru WRX 2008-14/Forester XT 2008-2013/Legacy GT 2003-2008/Mazdaspeed 3+6 / CX7 2.3L
TS-0205-1016	TS-0205-1015	Subaru - WRX 2001-2007 / WRX Sti 2001+/Forester XT 2005-2007 WRX 2008-14
TS-0205-1026*		Nissan GTR R32/R33/R34 / GTS-T R32/R33/R34 / Stagea 1996/2007

**Note that GTR requires 2 kits and GTS-T requires 1 kit*

Dual Port Universal

TS-0205-1015
Subaru - WRX 2001-2007 / WRX Sti 2001+/ Forester XT 2005-2007 WRX 2008-14

TS-0205-1026
Nissan GTR R32/R33/R34 / GTS-T R32/ R33/R34 / Stagea 1996/2007

For Dual Port Configuration on Supersonic, Plumb Back, Dual Port and Megasonic (extra supplied trumpet is required)

PLUMB BACK - HIGH PERFORMANCE / CUSTOM BUILDS (UP TO 600 HP)

Turbosmart's Plumb Back BOV operates quietly, just like a standard diverter valve, so it does not draw unwanted attraction. The Plumb Back offers all the performance and durability benefits of a Turbosmart BOV, but with quiet operation that keeps you under the radar.

- A full time recirculating BOV, with one plumb back port
- Quiet operation

PLUMB BACK PART NUMBERS	
TS-0205-1261	32mm Blue
TS-0205-1262	32mm Black
TS-0205-1271	38mm Blue
TS-0205-1272	38mm Black

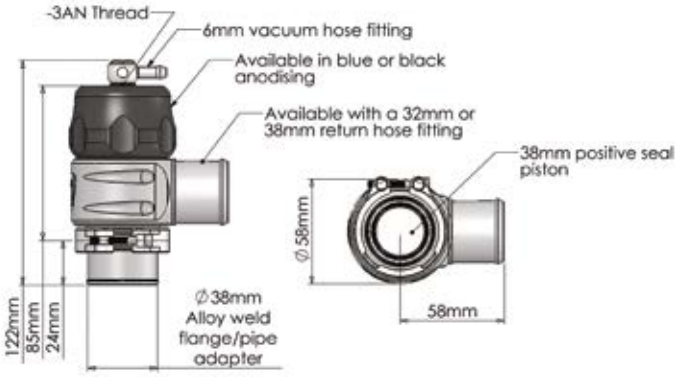

SUPERSONIC - HIGH PERFORMANCE / CUSTOM BUILDS (UP TO 600 HP)

The quintessential Turbosmart BOV, with that classic Blow-Off Valve noise. The Supersonic vents completely to atmosphere for big sound and big performance. The Supersonic is the BOV for the driver who wants the show along with the go.

A full-time vent to atmosphere BOV, featuring a single trumpet

Provides the characteristic Turbosmart Blow-Off Valve noise we know and love.

SUPERSONIC PART NUMBERS	
TS-0205-1300	Blue
TS-0205-1301	Black

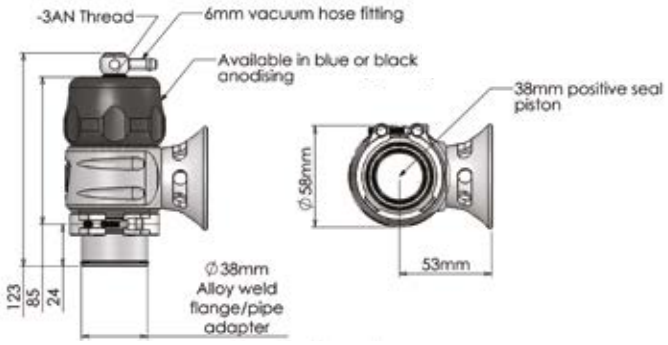

VEE-PORT PRO - POWERSPORTS / HIGH PERFORMANCE / CUSTOM BUILDS (UP TO 600 HP)

Originally designed for the Powersports market, the Vee-Port PRO is an ideal Blow-Off Valve for anyone who is short on space, or looking for a low-weight BOV solution. A full-time vent to atmosphere Blow-Off Valve, it features:

- A very compact design, perfect for tight to fit places
- A hard anodized aluminium piston for lightness
- Very high flow ability with a 38mm/1.5in piston
- Precision machining and assembly – the piston and valve body are measured to mere fractions of a millimetre, and perfectly matched
- A wide range of vehicle specific applications
- Quick release V-band clamp for ease of fabrication and installation
- Perfect for custom pipework and turbo kits

See our website for many more listings on the Vee-Port PRO range

VEE-PORT PRO PART NUMBERS	
TS-0205-1130	Vee-Port PRO Universal - Blue
TS-0205-1131	Vee-Port PRO Universal - Black

SMART PORT TECHNOLOGY - HIGH PERFORMANCE/ OEM UPGRADE (UP TO 600 HP)

The Smart Port is a revolutionary Blow-Off Valve design, combining precision construction with state of the art materials to give unrivalled valve performance. The Smart Port's unique piston is made from an aerospace alloy with a military-spec coating, ensuring its weight and friction are as low as possible, resulting in quicker valve response, better sealing and superior durability.

Its benefits include:

- Drive-by-wire friendly staging technology, eliminating compressor surge at both low and high RPM while integrating smoothly with the car's factory engine mapping
- A hard-anodised, lightweight, aluminium piston providing better valve response and prolonged piston life
- New Smart Port trumpet design which allows the use of a softer spring in the body of the BOV to aid valve response to the plumb back port, while still retaining the ability to vent to atmosphere

The Smart Port is currently available on Type 5 BOVs to suit a wide range of vehicles.

MODEL SPECIFIC TYPE 5 SMART PORT BOVS & BPVS PART NUMBERS	
TS-0215-1018	Smart Port Dual Port Subaru WRX 2015-current - Black
TS-0215-1022	Smart Port Dual Port Mitsubishi Evo IV to X - Red
TS-0215-1023	Smart Port Dual Port Mitsubishi Evo IV to X - Black
TS-0215-1027	Smart Port Dual Port Nissan GT-R R35 Kit
TS-0215-1367	Smart Port Supersonic Ford F150 2013 - 2014 Ecoboost - Black
TS-0215-1371	Smart Port Supersonic Ford F150 2013+ 3.5L & 2.7L Ecoboost/Raptor - Black

TS-0215-1022
Smart Port Dual Port
Mitsubishi Evo IV to X - Red

TS-0215-1018
Smart Port Dual Port
Subaru WRX 2015-current

TS-0215-1371
Smart Port Supersonic Ford F150 2013+ 3.5L
& 2.7L Ecoboost/Raptor

BIG BUBBA- SUPERCHARGING / TURBO BYPASS / DIESEL RACING (UP TO 1500 HP)

Sometimes bigger is just better. Designed for large capacity supercharged and turbocharged engines, including turbo-diesel engines, the Big Bubba is our largest piston style Blow-Off Valve.

Big Bubba features:

- Precision machining and assembly – the piston and valve body are measured to mere fractions of a millimetre, and perfectly matched for high boost applications
- Huge 50.8mm/2" inlet and outlet
- Hard anodised aluminium piston for light weight
- Strong V-band mounting system interchangeable with the Race Port BOV

Big Bubba is available in two different styles:

Bubba Sonic – Full time vent to atmosphere

Big Bubba – Full time recirculating

BIG BUBBA PART NUMBERS	
TS-0204-1201	Big Bubba Plumb Back - Blue/Silver
TS-0204-1202	Big Bubba Plumb Back - Black/Silver
TS-0204-1203	Big Bubba Plumb Back - Sleeper (Black/Black)
TS-0204-1301	Bubba Sonic BOV - Blue/Silver
TS-0204-1302	Bubba Sonic BOV - Black/Silver
TS-0204-1303	Bubba Sonic BOV - Sleeper (Black/Black)

GEN-V RACE PORT - ULTRA HIGH PERFORMANCE AND RACE USE (UP TO 2500 HP)

Famous for being an amazingly small and light BOV for forced induction competition level engines, the Race Port has race proven results from street, strip and circuit. Featuring our unique collar design, twin 1/8"NPT pressure ports and internal flow structures, it is 50% lighter and 25% smaller than the competition, while flowing 330 CFM - making it the highest flowing BOV of it's type on the market.

The Race Port is also available with a sensor cap, which can be used to log valve position. This is ideal for custom tuning applications, replacing guesswork with reliable data.

Supplied With: Vacuum fittings, profiled alloy weld flange, V-band assembly, and Blue Spring Rated -18 to -14 InHg (installed)

Features:

- Twin 1/8"NPT pressure ports for convenient positioning
- Billet 6000 series aluminium construction
- Quick release v-band collar for ease of installation and removal
- Female Flange version available to suit other manufacturers 50mm flanges
- 2.0" Inlet flows over 330 CFM
- MILSPEC hard anodized valve guide and stem
- Hi Temp Silicon Nomex diaphragm
- Collar secured cap for quick spring changes
- 4inHg to 26inHg activation range with spring kit (TS-0204-2104)
- Hall Effect, Non-Contact Valve Position Sensor option available
- Designed, manufactured and validated in-house at Turbosmart HQ

RACE PORT PART NUMBERS	
TS-0204-1131	Gen-V Race Port - Blue
TS-0204-1132	Gen-V Race Port - Black
TS-0204-1133	Gen-V Race Port - Purple
TS-0204-1134	Gen-V Race Port - Red
TS-0204-1151	Gen-V Race Port Supercharger - Blue
TS-0204-1152	Gen-V Race Port Supercharger - Black
RACE PORT WITH SENSOR CAPS PART NUMBERS	
TS-0204-1232	Gen-V Race Port HE Sensor Cap - Black
TS-0204-1231	Gen-V Race Port HE Sensor Cap - Blue
RACE PORT FEMALE FLANGE PART NUMBERS	
TS-0204-1141	Gen-V Race Port Female no weld flange - Blue
TS-0204-1142	Gen-V Race Port Female no weld flange- Black
TS-0204-1143	Gen-V Race Port Female no weld flange- Purple
TS-0204-1144	Gen-V Race Port Female no weld flange - Red

POWER PORT - HIGH LEVEL DRAG RACING FOR TURBO/SUPERCHARGED APPLICATIONS (UP TO 3000+ HP)

The Power Port is Turbosmart's largest and highest flowing Blow-Off Valve ever, resetting the flow benchmark set by our popular and highly regarded Race Port BOV. The Power Port's massive 2.5in inlet, unprecedented valve lift, supersized ports and carefully designed CFD flow-paths mean it has more than enough breathing room for even the most powerful turbocharged drag racing engines, preventing damaging compressor surge and throttle plate damage at the end of the quarter mile, even at the most extreme boost levels. The Power Port is designed to be as light as possible, to keep vehicle weight down.

Its cutting edge dual-chamber design means it can be held open with the use of a solenoid to aid turbo response and control during staging to give the best possible launch.

The Power Port is also available with a sensor cap, which can be used to log valve position. This is ideal for custom tuning applications, replacing guesswork with reliable data.

Supplied With: 1/4" -4AN Nipple, 1/8" NPT Blank, 1/8" NPT Nipple, Profiled Inlet Weld-On Flange (Alloy) and Collar Tool.

Features:

- Billet 6000 series aluminium construction
- Quick release v-band collar for ease of installation and removal
- 2.5" Inlet flows over 600 CFM
- MILSPEC hard anodized valve
- Twin 1/8"NPT port lower chamber for advanced control strategies
- -4 AN Upper port
- Collar secured cap for quick spring changes
- 4inHg to 20inHg activation range
- Valve position sensor option
- Pre drilled collar for lockwire provision

POWER PORT PART NUMBERS	
TS-0207-1001	Power Port - Blue
TS-0207-1002	Power Port - Black
TS-0207-3006	Power Port Sensor Cap only - Black
TS-0207-3007	Power Port Sensor Cap only - Blue
TS-0207-1101	Power Port with Sensor Cap - Blue
TS-0207-1102	Power Port with Sensor Cap - Black

GEN-V WASTEGATES

38mm | 40mm | 45mm | 50mm | 60mm

Our new Gen-V wastegates are a direct fit upgrade to all 4th-generation Turbosmart wastegates. All Gen-V wastegates are provided with a range of springs (3-26psi) and feature our unique collar-locking system, rotatable actuator, strap-type V-band clamps, 1/8" NPT ports, and "optional" liquid-cooling.

Also available in Motorsport and Compressed Gas versions.

Flow - Turbosmart's innovative engineering team has designed the Gen-V range to be the highest flowing on the market in ANY size. Through careful flow conditioning, flow has been optimized at every valve position without compromising control.
Thermal Performance – Building on the existing market leading thermal performance of Turbosmart external wastegates. The new Gen-V range handles more heat energy for three times longer during thermal gas stand testing, allowing for a greater thermal threshold currently unseen in the marketplace. The optional liquid cooling provision allows for unparalleled thermal performance in high temperature engine bays, for example Jet-skis.
Control – The Gen-V allows for any application of boost control. Aside from the standard units, bespoke Compressed Gas and Motorsport options are available and the entire range is compatible with our unique valve position sensor. For fine-tuning boost performance, a selection of springs are supplied with each wastegate. All wastegates feature 1/8" NPT ports for maximum response and positive sealing at high temperatures and pressures.
Adjustability - The unique variable adjustment design allows the wastegate actuator base to be oriented independently from the weld flanges. The cap is also completely independent and indexable in 12 different positions compared to the actuator base and body - so you can always get your fittings where you need them.
Upgrades and Servicing - Due to the modular construction, all components can be removed or upgraded, making the new Gen-V wastegate range upgradeable and completely serviceable.

ULTRA-GATE38

The Ultra-Gate38 features:

- Interchangeable with all other 2 bolt wastegates
- 38mm valve size
- High temp spring combinations from 3 – 26psi supplied in the box
- 1/8"NPT ports
- Popular 2-bolt flange fitting to suit 1-5/8" OD pipe
- Locking collar for compact size and easy spring changes
- Hall Effect, Non-Contact Position Sensor Option Available
- Refer to Turbosmart.com for Spare parts and Accessories

Supplied with:

Springs, valve seat, gaskets, 2 x 1/8" NPT hose fittings, 2 x blanking plugs, collar tool and bolts to fit wastegate.

ULTRA-GATE38 PART NUMBERS	
TS-0551-1001	WG38 Gen-V Ultra-Gate 38 7psi Blue
TS-0551-1002	WG38 Gen-V Ultra-Gate 38 7psi Black
TS-0551-1011	WG38 Gen-V Ultra-Gate 38 14psi Blue
TS-0551-1012	WG38 Gen-V Ultra-Gate 38 14psi Black
TS-0551-1013	WG38 Gen-V Ultra-Gate 38 14psi Purple
TS-0551-1014	WG38 Gen-V Ultra-Gate 38 14psi Red

COMP-GATE40

The Comp-Gate40 features:

- Direct swap for Turbosmart Gen 4 Comp-Gate 40, inlet is the same as other 38/40mm V-band wastegates
- 40mm valve size
- High temp spring combinations from 3 – 26psi supplied in the box
- 1/8"NPT ports
- V-band clamp mounting system to suit 1-3/4" OD pipe
- Locking collar for compact size and easy spring changes
- Available in Motorsport and Compressed Gas versions
- Hall Effect, Non-Contact Position Sensor Option Available
- Refer to Turbosmart.com for Spare parts and Accessories

Supplied with:

Springs, Inlet and outlet weld flanges, V-band clamps, valve seat, 2 x 1/8" NPT hose fittings, blanking plugs, and collar tool

COMP-GATE40 PART NUMBERS	
TS-0552-1001	WG40 Gen-V Comp-Gate 40 7psi Blue
TS-0552-1002	WG40 Gen-V Comp-Gate 40 7psi Black
TS-0552-1011	WG40 Gen-V Comp-Gate 40 14psi Blue
TS-0552-1012	WG40 Gen-V Comp-Gate 40 14psi Black
TS-0552-1013	WG40 Gen-V Comp-Gate 40 14psi Purple
TS-0552-1014	WG40 Gen-V Comp-Gate 40 14psi Red
TS-0552-1101	WG40M Gen-V Comp-Gate 40 14psi Motorsport Blue
TS-0552-1102	WG40M Gen-V Comp-Gate 40 14psi Motorsport Black
TS-0552-1201	WG40CG Gen-V Comp-Gate 40 5psi Compressed Gas Blue
TS-0552-1202	WG40CG Gen-V Comp-Gate 5psi Compressed Gas Black

HYPER-GATE45

The Hyper-Gate45 features:

- Direct swap for Turbosmart Gen 4 Hyper-Gate45 and other 44mm V-band wastegates
- 45mm valve size
- High temp spring combinations from 3 – 26psi supplied in the box
- 1/8"NPT ports
- V-band clamp mounting system to suit 1-7/8" OD pipe
- Locking collar for compact size and easy spring changes
- Available in Motorsport and Compressed Gas versions
- Hall Effect, Non-Contact Position Sensor Option Available
- Refer to Turbosmart.com for Spare parts and Accessories

Supplied with:

Springs, Inlet and outlet weld flanges, V-band clamps, valve seat, 2 x 1/8" NPT hose fittings, blanking plugs, and collar tool

HYPER-GATE45 PART NUMBERS	
TS-0553-1001	WG45 Gen-V Hyper-Gate 45 7psi Blue
TS-0553-1002	WG45 Gen-V Hyper-Gate 45 7psi Black
TS-0553-1011	WG45 Gen-V Hyper-Gate 45 14psi Blue
TS-0553-1012	WG45 Gen-V Hyper-Gate 45 14psi Black
TS-0553-1013	WG45 Gen-V Hyper-Gate 45 14psi Purple
TS-0553-1014	WG45 Gen-V Hyper-Gate 45 14psi Red
TS-0553-1101	WG45M Gen-V Hyper-Gate 45 14psi Motorsport Blue
TS-0553-1102	WG45M Gen-V Hyper-Gate 45 14psi Motorsport Black
TS-0553-1201	WG45CG Gen-V Hyper-Gate 45 5psi Compressed Gas Blue
TS-0553-1202	WG45CG Gen-V Hyper-Gate 45 5psi Compressed Gas Black

PRO-GATE50

The Pro-Gate50 features:

- Direct swap for Turbosmart Gen 4 Pro-Gate50 wastegates
- 50mm valve size
- High temp spring combinations from 3 – 26psi supplied in the box
- 1/8"NPT ports
- V-band clamp mounting system to suit 2" OD pipe
- Available in Compressed Gas version
- Hall Effect, Non-Contact Position Sensor Option Available
- Refer to Turbosmart.com for Spare parts and Accessories

Supplied with:

Springs, Inlet and outlet weld flanges, V-band clamps, valve seat, 2 x 1/8" NPT hose fittings, blanking plugs, and collar tool

PRO-GATE50 PART NUMBERS	
TS-0554-1001	WG50 Gen-V Pro-Gate 50 7psi Blue
TS-0554-1002	WG50 Gen-V Pro-Gate 50 7psi Black
TS-0554-1011	WG50 Gen-V Pro-Gate 50 14psi Blue
TS-0554-1012	WG50 Gen-V Pro-Gate 50 14psi Black
TS-0554-1013	WG50 Gen-V Pro-Gate 50 14psi Purple
TS-0554-1014	WG50 Gen-V Pro-Gate 50 14psi Red
TS-0554-1201	WG50CG Gen-V Pro-Gate 50 5psi Compressed Gas Blue
TS-0554-1202	WG50CG Gen-V Pro-Gate 50 5psi Compressed Gas Black

POWER-GATE60

The Power-Gate60 features:

- Direct swap for Turbosmart Gen 4 Power-Gate60 wastegates.
- 60mm valve size
- High temp spring combinations from 3 – 26psi supplied in the box
- 1/8"NPT ports
- V-band clamp mounting system to suit 2-1/2" OD pipe
- Available in Compressed Gas version
- Hall Effect, Non-Contact Position Sensor Option Available
- Refer to Turbosmart.com for Spare parts and Accessories

Supplied with:

Springs, Inlet and outlet weld flanges, V-band clamps, valve seat, 2 x 1/8" NPT hose fittings, blanking plugs, and collar tool

POWER-GATE60 PART NUMBERS	
TS-0555-1001	WG60 Gen-V Power-Gate 60 7psi Blue
TS-0555-1002	WG60 Gen-V Power-Gate 60 7psi Black
TS-0555-1011	WG60 Gen-V Power-Gate 60 14psi Blue
TS-0555-1012	WG60 Gen-V Power-Gate 60 14psi Black
TS-0555-1013	WG60 Gen-V Power-Gate 60 14psi Purple
TS-0555-1014	WG60 Gen-V Power-Gate 60 14psi Red
TS-0555-1201	WG60CG Gen-V Power-Gate 60 5psi Compressed Gas Blue
TS-0555-1202	WG60CG Gen-V Power-Gate 60 5psi Compressed Gas Black

GEN-V SENSOR CAPS

Wouldn't it be great to actually know what is happening inside your wastegate? Now you can! With the Turbosmart Wastegate Sensor Cap you can "see" into the wastegate, so there is no need to guess anymore. You can log the wastegate valve position and know exactly what it is doing in relation to other engine operating conditions. For example, you can see at X RPM, your valve lifts Y much, which results in Z boost pressure. No uncertainty, just hard data.

The Turbosmart Wastegate Sensor Cap:

- High temp fully sealed proprietary sensor
- Small and high resolution
- Allows the user to install a valve position sensor to their standard Turbosmart wastegate by only changing the cap
- Is compatible with a wide range of popular data loggers (Haltech, MoTec, RacePak, etc.)
- Is an off the shelf item, available for all Gen-V Turbosmart wastegate sizes: 38mm, 40mm, 45mm, 50mm, and 60mm

PART# BLACK	PART# BLUE	DISPLAY NAME
TS-0550-3022	TS-0550-3023	Gen-V WG38/40 Sensor Cap
TS-0550-3024	TS-0550-3025	Gen-V WG45/50 Sensor Cap
TS-0550-3026	TS-0550-3027	Gen-V WG60 Sensor Cap
TS-0550-3062	TS-0550-3063	Gen-V WG38/40 CG Sensor Cap
TS-0550-3064	TS-0550-3065	Gen-V WG45/50 CG Sensor Cap
TS-0550-3066	TS-0550-3067	Gen-V WG60 CG Sensor Cap

GEN-V SPARES & ACCESSORIES

Everything you need to help fabricate, install, upgrade and service our entire Gen-V range. From fabrication and maintenance tools to V-band bolt nuts, our spares and accessories to make installation and servicing easier than ever. Visit our website and go to Spares & Accessories/Wastegates & IWG spares and accessories section.

WELDING PURGE BUNGS

HP WASTEGATES

The world's highest pressure external wastegates – Turbosmart's HP wastegate range retains the compactness of and lightness Turbosmart wastegates are known for, with the added bonus of being capable of controlling high boost pressures.

The HP wastegates are:

- Available in 38mm, 40mm, 45mm sizes
- 35PSI standard, 40PSI optional
- Only 28mm taller than standard wastegates
- Ideal for turbo diesel and drag racing

HP WASTEGATES PART NUMBERS	
TS-0501-1201	Ultra-Gate38 HP 35PSI - Blue
TS-0501-1202	Ultra-Gate38 HP - 35PSI - Black
TS-0505-1201	Comp-Gate40 HP 35PSI - Blue
TS-0505-1202	Comp-Gate40 HP 35PSI - Black
TS-0506-1201	Hyper-Gate45 HP 35PSI - Blue
TS-0506-1202	Hyper-Gate45 HP 35PSI - Black
TS-0505-2010	Blue HP 35PSI Upgrade kit suits Gen4 38mm, 40mm, 45mm
TS-0505-2011	Black HP 35PSI Upgrade kit suits Gen4 38mm, 40mm, 45mm

INTERNAL WASTEGATE ACTUATOR (IWG-75)

On an internally wastegated turbo, the wastegate valve is built into the turbine housing. The wastegate valve is controlled by an internal wastegate actuator. As boost rises the actuator controls the position of the wastegate valve, which in turn controls the exhaust gas flow to the turbine.

The Turbosmart wastegate actuator range has been designed as a stronger, more reliable replacement for OEM parts. Like all Turbosmart parts, billet construction means they are stronger and more durable than a stock actuator, while Turbosmart's focus on performance means boost comes on faster and holds on longer, putting you in control!

The Turbosmart IWG-75 actuator range features:

- Base spring pressure available from 3PSI to 26PSI
- Stable boost control
- Improved boost response
- Flatter boost curve in the top end
- Serviceable with spares parts and accessories
- A range of vehicle/turbo specific applications

INTERNAL WASTEGATE ACTUATOR PART NUMBERS	
TS-0681-5072	Universal 150mm Actuator 7PSI
TS-0681-5102	Universal 150mm Actuator 10PSI
TS-0681-5142	Universal 150mm Actuator 14PSI
TS-0681-4102	Universal M6 140mm Rod Black 10PSI
TS-0625-1072	Garrett GT2860RS (Disco Potato) 7PSI
TS-0625-4072	Garrett GTX28R SR20 7PSI
TS-0620-1142	Borg Warner EFR B1 Single Scroll 14PSI
TS-0620-3142	Borg Warner EFR B2 Single/Twin Scroll 14PSI
TS-0620-2142	Borg Warner EFR B1 Twin Scroll 14PSI
REFER TO WEBSITE FOR MODEL SPECIFIC FITMENT	

HIGH PRESSURE INTERNAL WASTEGATE ACTUATOR

Turbosmart's Internal Wastegate Actuators for those wanting to run big boost pressure, without the hassle of fitting custom exhaust manifolds and external wastegates, Turbosmart introduces the IWGHP, High Pressure Internal Wastegate Actuator. The IWGHP range provides better turbo response and greater sensitivity when managing boost than a stock actuator, with the added bonus of being capable of handling high boost pressures. Only 28mm longer than the standard IWG-75 these wastegates are ideal for high boost turbo diesel and racing applications.

Available with 35PSI springs as standard, Turbosmart also offers up to 40PSI springs, for the extra hard core

HIGH PRESSURE INTERNAL WASTEGATE ACTUATOR PART NUMBERS	
TS-0626-1354	IWG75 HP Dodge Cummins Turbo Diesel Black 35PSI

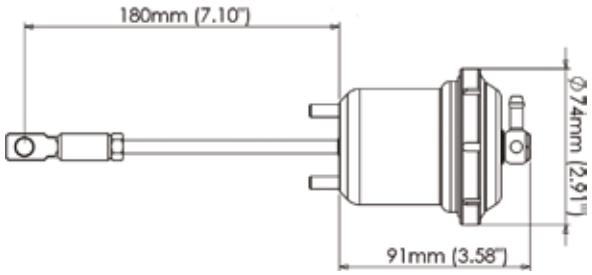

TWIN PORT ACTUATOR

The Twin Port IWG-75 uses the air-pressure differential between two sealed chambers to create a dynamic force which overcomes the mechanical spring force in the actuator.

Featuring:

- More precise boost curve and wider range between minimum and maximum boost compared to conventional single-port actuators
- Ideal for traction-limited applications where precise control is important, such as front-wheel-drive or drag racing vehicles
- Billet construction for greater durability and strength than a stock wastegate actuator
- Improved response means boost comes on faster and holds longer, with less drop off at high RPM
- Interchangeable springs for a huge range of boost levels

TWIN PORT ACTUATOR PART NUMBERS	
TS-0681-6142	Twin Port Universal Actuator 14PSI
TS-0620-3143	Twin Port Borg Warner EFR B2 Single/Twin Scroll 14PSI
TS-0620-1143	Twin Port Borg Warner EFR B1 Single Scroll 14PSI
TS-0620-2143	Twin Port Borg Warner EFR B1 Twin Scroll 14PSI
TS-0620-2263	Borg Warner B1 Twin Scroll 26 PSI
TS-0620-3263	BorgWarner TP B2 Single/Twin Scroll 26 PSI

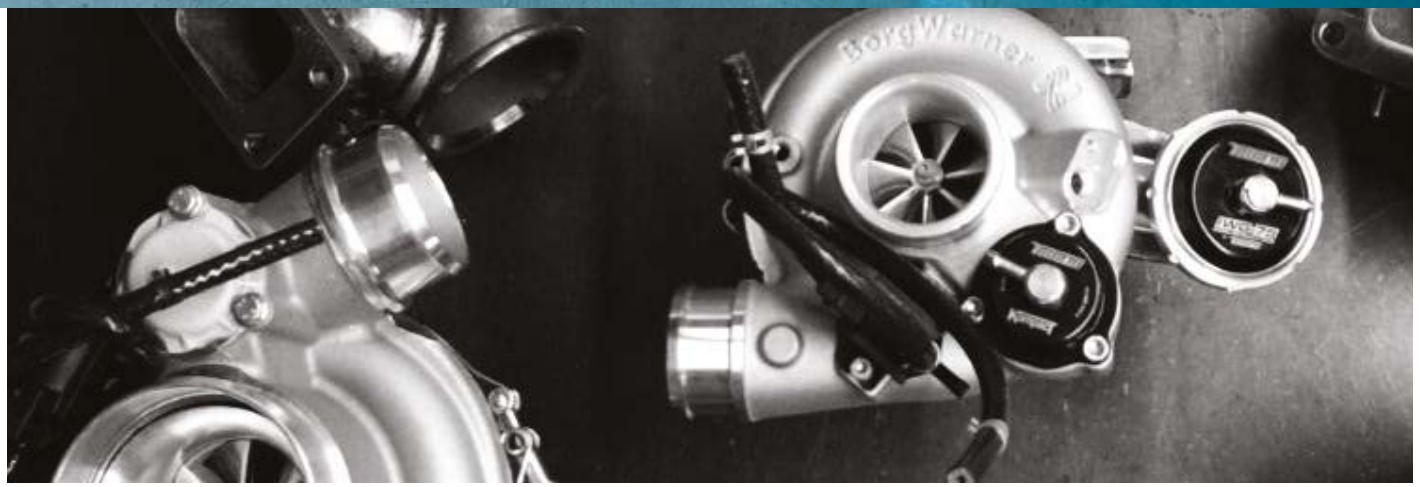

BORG WARNER EFR SERIES TURBO ACCESSORY FITMENT GUIDE

EFR TURBO SERIES	BORG WARNER		TURBOSMART ACTUATOR (IWG)		TURBOSMART BYPASS VALVE		
	PART NUMBER	DESCRIPTION	SINGLE PORT	TWIN PORT	RECIRCULATING	DUAL PORT	BLOCK OFF PLATE
EFR-6258 B1	179150	Single Scroll - 0.64 A/R	TS-0620-1142	TS-0620-1143	TS-0203-1261	TS-0203-1061	TS-0203-2002
	179388	Single Scroll - 0.64 A/R	TS-0620-1142	TS-0620-1143	TS-0203-1261	TS-0203-1061	TS-0203-2002
	11589880036	Twin Scroll - 0.80 A/R	TS-0620-2142	TS-0620-2143	TS-0203-1261	TS-0203-1061	TS-0203-2002
EFR-6758 B1	1159880034	Single Scroll - 0.85 A/R	TS-0620-1142	TS-0620-1143	TS-0203-1261	TS-0203-1061	TS-0203-2002
	11589880035	Single Scroll - 0.85 A/R	TS-0620-1142	TS-0620-1143	TS-0203-1261	TS-0203-1061	TS-0203-2002
	11589880037	Twin Scroll - 0.80 A/R	TS-0620-2142	TS-0620-2143	TS-0203-1261	TS-0203-1061	TS-0203-2002
EFR-7163 B1	11639880005	Single Scroll - 0.85 A/R	TS-0620-1142	TS-0620-1143	TS-0203-1261	TS-0203-1061	TS-0203-2002
	11639880006	Single Scroll - 0.85 A/R	TS-0620-1142	TS-0620-1143	TS-0203-1261	TS-0203-1061	TS-0203-2002
	11639880002	Twin Scroll - 0.80 A/R	TS-0620-2142	TS-0620-2143	TS-0203-1261	TS-0203-1061	TS-0203-2002
EFR-7064 B2	179355	Single Scroll - 0.83 A/R	TS-0620-3142	TS-0620-3143	TS-0203-1261	TS-0203-1061	TS-0203-2002
	179389	Twin Scroll - 0.92 A/R	TS-0620-3142	TS-0620-3143	TS-0203-1261	TS-0203-1061	TS-0203-2002
	179391	Twin Scroll - 1.05 A/R	EXTERNAL WASTEGATE REQUIRED		EXTERNAL BOV RECOMMENDED		TS-0203-2002
EFR-7670 B2	179351	Single Scroll - 0.83 A/R	TS-0620-3142	TS-0620-3143	EXTERNAL BOV RECOMMENDED		TS-0203-2002
	179390	Twin Scroll - 0.92 A/R	TS-0620-3142	TS-0620-3143	EXTERNAL BOV RECOMMENDED		TS-0203-2002
	179392	Twin Scroll - 1.05 A/R	EXTERNAL WASTEGATE REQUIRED		EXTERNAL BOV RECOMMENDED		TS-0203-2002
EFR-8374 B2	179258	Single Scroll - 0.83 A/R	TS-0620-3142	TS-0620-3143	EXTERNAL BOV RECOMMENDED		TS-0203-2002
	179357	Twin Scroll - 0.92 A/R	TS-0620-3142	TS-0620-3143	EXTERNAL BOV RECOMMENDED		TS-0203-2002
	179393	Twin Scroll - 1.05 A/R	EXTERNAL WASTEGATE REQUIRED		EXTERNAL BOV RECOMMENDED		TS-0203-2002
EFR-9180 B2	179358	Single Scroll - 0.83 A/R	TS-0620-3142	TS-0620-3143	EXTERNAL BOV RECOMMENDED		TS-0203-2002
	12809880000	Single Scroll - 0.92 A/R	TS-0620-3142	TS-0620-3143	EXTERNAL BOV RECOMMENDED		TS-0203-2002
	179394	Twin Scroll - 1.05 A/R	EXTERNAL WASTEGATE REQUIRED		EXTERNAL BOV RECOMMENDED		TS-0203-2002

FUEL PRESSURE REGULATOR: FPR800 (1/8" NPT)

Turbosmart's newest High-performance EFI fuel pressure regulator is smaller, lighter and better! Now featuring two 1/8" NPT inlet ports, one 1/8" NPT return port and 1/8" gauge port, 30-90 PSI base pressure adjustment, 1:1 ratio, premium diaphragm and stainless steel valve + seat allow for ANY fuel type including E85 and is suitable for engines with up to 800hp fuel systems. FPR's feature a non-directional bias to regulation, so no matter where the fuel comes in they will regulate the same. Factory tested.

Supplied With: Mounting bracket and retaining clip, vacuum fitting and gauge port blank.

- EFI fuel regulator
- 3 x 1/8" NPT ports
- 1/8" NPT Gauge port
- Capable of regulating up to 800hp of fuel flow
- 1:1 manifold pressure ratio with no load losses
- 30-90psi base pressure range
- Stainless steel internals providing maximum integrity and reliability
- Suitable for all fuel types
- Operational between -35ºC to +200ºC
- MILSPEC diaphragm
- Bracket and retaining clip supplied
- Pressure port 1/16 NPT with nipple supplied

FPR800

FPR800 - 1/8NPT PART NUMBERS	
TS-0401-1101	FPR 800 - Blue
TS-0401-1102	FPR 800 - Black
TS-0401-1107	FPR 800 - Purple
TS-0401-1108	FPR 800 - Red

FPR1200

FUEL PRESSURE REGULATOR: FPR1200 (-6AN)

Turbosmart's newest High-performance EFI fuel pressure regulator is smaller, lighter and better! Featuring two -6AN inlet ports, one -6AN return port, and one 1/8 NPT gauge port, 30-90 PSI base pressure adjustment, 1:1 ratio, premium diaphragm and stainless steel valve + seat allow for ANY fuel type including E85 and is suitable for engines with up to 1200hp fuel systems. FPR's feature a non-directional bias to regulation, so no matter where the fuel comes in they will regulate the same. Factory tested.

Supplied With: Mounting bracket and retaining clip, vacuum fitting and gauge port blank.

- EFI fuel regulator
- 3 x -6AN ports
- 1/8" NPT gauge port
- Capable of regulating up to 1200hp of fuel flow
- 1:1 manifold pressure ratio with no load losses
- 30-90psi base pressure range
- Stainless steel internals providing maximum integrity and reliability
- Suitable for all fuel types
- Operational between -35ºC to +200ºC
- MILSPEC diaphragm
- Bracket and retaining clip supplied
- Pressure port 1/16 NPT with nipple supplied

FPR1200 -6AN PART NUMBERS	
TS-0401-1103	FPR 1200 - Blue
TS-0401-1104	FPR 1200 - Black
TS-0401-1109	FPR 1200 - Purple
TS-0401-1110	FPR 1200 - Red

FUEL PRESSURE REGULATOR: FPR2000 (-8AN)

Turbosmart's newest High-performance EFI fuel pressure regulator is smaller, lighter and better! Featuring two -8AN inlet ports, one -8AN return port, and one 1/8 NPT gauge port, 30-90 PSI base pressure adjustment, 1:1 ratio, premium diaphragm and stainless steel valve + seat allow for ANY fuel type including E85 and is suitable for engines with up to 2000hp fuel systems. FPR's feature a non-directional bias to regulation, so no matter where the fuel comes in they will regulate the same. Factory tested.

Supplied With: Mounting bracket and retaining clip, vacuum fitting and gauge port blank.

- EFI fuel regulator
- 3 x -8AN ports
- 1/8" NPT gauge port
- Capable of regulating up to 2000hp of fuel flow
- 1:1 manifold pressure ratio with no load losses
- 30-90psi base pressure range
- Stainless steel internals providing maximum integrity and reliability
- Suitable for all fuel types
- Operational between -35ºC to +200ºC
- MILSPEC diaphragm
- Bracket and retaining clip supplied
- Pressure port 1/16 NPT with nipple supplied

FPR2000

FPR2000 -8AN PART NUMBERS	
TS-0401-1105	FPR 2000 - Blue
TS-0401-1106	FPR 2000 - Black
TS-0401-1111	FPR 2000 - Purple
TS-0401-1112	FPR 2000 - Red

FUEL FILTERS

The new range of billet fuel filters provides the perfect accompaniment to Turbosmart's Fuel Pressure Regulators. They are available in three sizes to suit different fuel systems and FPRs, with -6AN, -8AN and -10AN fitting sizes.

A 10 micron stainless steel filter element ensures the engine receives clean fuel, free of the finest particles, while the filter element itself is replaceable and available separately, meaning minimal cost come service time.

FUEL FILTER PART NUMBERS	
TS-0402-1130	Fuel Filter 10um AN-6
TS-0402-1131	Fuel Filter 10um AN-8
TS-0402-1132	Fuel Filter 10um AN-10
TS-0402-1140	Fuel Filter Bracket
TS-0402-3001	Billet Fuel Filter Element Replacement 10um

TS-0402-1130

TS-0402-1131

TS-0402-1132

FUEL RAIL ADAPTERS

Turbosmart fuel rail adapters allow for fitment of a Turbosmart fuel pressure regulator to the following OEM fuel rails:

PART NUMBER	MAKE	ENGINE	MODEL
TS-0402-1001	Nissan	CA18DET	PS13 Silvia, RPS13 180SX
TS-0402-1001	Subaru	EJ205	GC8/GF8 WRX, Liberty/Outback up to MY00
TS-0402-1001	Subaru	EJ207	GC8/GF8 WRX STi
TS-0402-1001	Subaru	EJ255	GRB WRX (2008 - 2014), Forrester (2008 - 2014), Liberty (2005 - 2014)
TS-0402-1002	Subaru	EJ205	GDA WRX (2001 - 2008)
TS-0402-1002	Toyota	2JZ-GTE	Supra JZ80, Aristo JZ147
TS-0402-1002	Toyota	4AGE	Corolla
TS-0402-1002	Toyota	4AGZE	Corolla
TS-0402-1002	Toyota	4EFTE	Starlet EP
TS-0402-1003	Toyota	1JZ-GTE	Supra, Cresta, Chaser, Mark II, Soarer
TS-0402-1003	Toyota	1UZ-FE	Soarer
TS-0402-1003	Toyota	3S-GTE	MR2, Celica GT4
TS-0402-1004	Honda	B16A/B16B	EG6 Civic, EK4 Civic, CRX Del Sol, EK9 Civic Type R
TS-0402-1005	Mitsubishi	4G63	Lancer Evolution 4-10, FTO
TS-0402-1006	Audi	1.8T 20v	A3, A4, A6, S3, TT
TS-0402-1006	Ford	4.0L Barra	XR6 BA, BF,FG Turbo, Territory
TS-0402-1006	VW	1.8T 20v	Beetle (1998-2011)
TS-0402-1013	Subaru	EJ257	Subaru WRX STI 08 - onwards (includes 90 Degree Fitting)
TS-0402-1014	Mitsubishi	4B11T	Lancer Evolution 10

TS-0402-1005

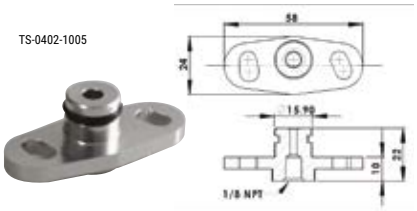

TS-0402-1006

TS-0402-1001

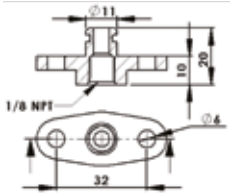

TS-0402-1003

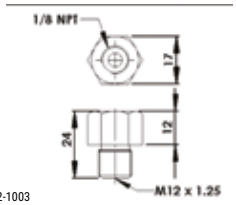

TS-0402-1013

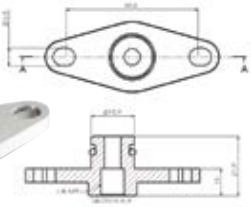

TS-0402-1002

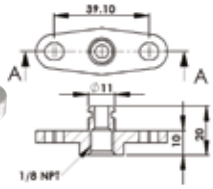

TS-0402-1004

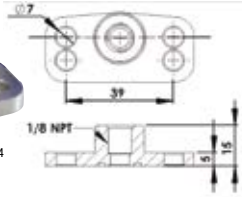

TS-0402-1014

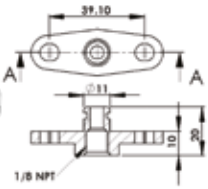

MANUAL BOOST CONTROLLERS

Turbosmart's manual boost controllers are easy to fit, simple in operation, and require little maintenance – making them one of the best "bang for buck" performance mods on the market.

Turbosmart manual boost controllers offer:

- Superior quality
- A small, elegant design
- An easy to use detent adjustment system
- Robust engineering with the one piece body and solid needle valve
- Our exclusive gate feature which brings boost on earlier
- Easy mounting with the supplied bracket

Turbosmart manual boost controllers are perfect for when you need:

- A simple, cost effective solution to boost control
- A reliable mechanical system for harsh or demanding environments

Boost Tee - The perfect "set it and forget it" boost controller

In-Cabin - Adjust the boost from the driver's seat

Dual Stage - Features two adjustable boost levels - Quickly switch between high and low boost using the included rocket launcher switch

BOOST TEE BOOST CONTROLLER

IN-CABIN BOOST CONTROLLER

DUAL STAGE BOOST CONTROLLER

Turbosmart has released a new and updated version dual stage boost controller.

It features a billet aluminium housing and bullet valve technology for ultra-fast boost response with two adjustable boost levels. Toggle between high and low boost on the fly. Both high and low boost settings are fully adjustable.

All Turbosmart Gated Boost Controllers feature our exclusive Gate feature which minimizes wastegate creep and can improve turbo response by up to 800 rpm earlier in the rev range – this means that you can increase the performance and response from your engine without even raising the maximum boost level.

Stable increases in boost over wastegate spring pressure of 200%+ for internal wastegate and 100% for external wastegates are common practice using our manual boost controllers.

Manufactured from high-grade billet aluminium and are renowned for their easy installation, robust design, stability and our detent adjustment system allows for accurate and simple tuning of boost pressure.

The Turbosmart Gated Boost Control Valve range is ideal for mildly modified turbocharged engines and perfect for increasing boost levels on factory turbo cars and turbocharged engines.

Supplied With:

All fitting hardware and a Rocket Launcher Switch.

MANUAL BOOST CONTROLLER PART NUMBERS	
TS-0101-1001	Boost Tee boost controller - Blue
TS-0101-1002	Boost Tee boost controller - Black
TS-0106-1001	In-Cabin boost controller - Blue
TS-0106-1002	In-Cabin boost controller - Black
TS-0105-1101	Dual Stage Boost Controller V2 - Blue
TS-0105-1102	Dual Stage Boost Controller V2 - Black

MANUAL BOOST CONTROLLER PARTS AND ACCESSORIES

PART NUMBER	DESCRIPTION
TS-0101-3001	Replacement Mounting Bracket for 'Boost Tee' and 'In Cabin' Manual Boost Controllers
TS-0101-3002	Boost Tee Rebuild Kit
TS-0105-3002	Replacement Tee Piece for 'In Cabin' and 'Dual Stage' Manual Boost Controllers
TS-0105-3005	Replacement 'Rocket Launcher' style switch suit 'Dual Stage' Manual Boost Controller
TS-0105-3001	Replacement mounting bracket for 'Dual Stage' Manual Boost Controller

ELECTRONIC BOOST CONTROLLERS

Turbosmart's e-Boost range of electronic boost controllers give you the ultimate control over your boost curve.

Turbosmart electronic boost controllers allow you to control three individual characteristics of your boost, by adjusting three easy to set parameters:

The maximum boost pressure (set point)

The spool up rate of the turbocharger (wastegate pressure)

And the reaction time of the controller (sensitivity)

Turbosmart Electronic Boost Controllers:

- Feature sturdy aluminium cases, for durability and strength
- Can be configured to show PSI, kPa, or BAR on an easy-to-read, three-segment display with auto dimming and BAR graph display
- Supplied with a three-port solenoid, solenoid mounting bracket, and vacuum hose

e-BOOST2

e-Boost2 is the ultimate boost controller, designed with high performance and racing in mind, it is perfect for the tough conditions of track use, and absolutely untouchable in a street application. e-Boost2 is available in two different sizes (60mm and 66mm) and a wide range of colours to suit any interior.

With an e-Boost2 you can:

- Control six levels of boost, with a maximum boost of 60PSI
- Enjoy faster boost response, thanks to Turbosmart's unique Gate Pressure function, and longer boost duration at high RPM via RPM correction factor
- Use Boost on Demand for instant overtaking power
- Set a different boost level for each gear, or if you prefer, program boost against time or RPM
- Control water spray, methanol, nitrous injection, or just about anything else with e-Boost2's handy auxiliary outputs
- Monitor your boost and RPM with Peak Hold/Max Boost recall
- Protect your motor with Overboost Shutdown safety feature

e-BOOST2 PART NUMBERS	
TS-0301-1001	e-Boost2 60PSI 60mm White face/Silver bezel
TS-0301-1014	e-Boost2 60PSI 60mm White face/Black bezel
TS-0301-1002	e-Boost2 60PSI 60mm Black face/Silver bezel
TS-0301-1003	e-Boost2 60PSI 60mm Sleeper
TS-0301-1103	e-Boost2 60PSI 60mm Sleeper - 4 Port
TS-0301-1004	e-Boost2 60PSI 66mm Silver face/Silver bezel
TS-0301-1005	e-Boost2 60PSI 66mm White face/Black bezel
TS-0301-1013	e-Boost2 60PSI 66mm Black face/Silver bezel
TS-0301-1011	e-Boost2 60PSI 66mm Black face/Black bezel

WHITE FACE/BLACK BEZEL

WHITE FACE/SILVER BEZEL

SLEEPER

BLACK FACE/SILVER BEZEL

e-BOOSTHP

Turbosmart's e-BoostHP is a self-contained electronic boost controller capable of handling up to 120 PSI of boost. It can also control water spray, methanol or nitrous injection, manage shift/warning lights and read/monitor RPM.

E-BOOSTHP PART NUMBERS	
TS-0301-1120	e-BoostHP 120 PSI 60mm Sleeper
TS-0301-1121	e-BoostHP 120 PSI 60mm Sleeper - 4 Port

e-BOOSTHP

e-BOOST STREET

The e-Boost Street is one of the most popular electronic boost controllers on the market. It is easy to use, looks great, and is fantastic at controlling boost! The ideal boost controller for your street car, it features:

40psi/2.75 BAR max boost operating pressure

Two boost settings – easily selected via the "turn-and-push" button. An external switch can also be used to change between boost groups

Boost correction factor eliminates a problem many street cars with standard turbo systems suffer from – boost drop off at high RPM

Auxiliary output - switch an auxiliary device on or off based on boost and RPM

Flash warning for over boost shutdown or rev limit

Easy mounting within a 1/4 DIN size opening

Display mode: Live display of boost or RPM

e-BOOST STREET PART NUMBERS	
TS-0302-1002	e-Boost Street 40psi

ELECTRONIC BOOST CONTROLLER PARTS AND ACCESSORIES

PART NUMBER	DESCRIPTION
TS-0301-2001	eB2 60mm Dash Mounting System
TS-0301-2002	eB2 60mm Roll Cage Mount
TS-0301-2003	eB2 4 Port Solenoid
TS-0301-2006	eB2 60mm Dual Shift Silver
TS-0301-2007	eB2 60mm Dual Shift Black
TS-0301-2008	eB2 LED- Red
TS-0301-2009	eB2 LED- Green
TS-0301-2010	eB2 LED- Blue
TS-0301-2011	eB2 LED- Orange
TS-0301-2012	eB2 Microswitch
TS-0301-2013	eB2 66mm Dash Mounting System
TS-0301-2014	eB2 66mm Roll Cage Mount
TS-0301-2017	eB2 66mm Dual Shift Silver
TS-0301-2018	eB2 66mm Dual Shift Black
TS-0301-2020	eB2 High Pressure Hose Fitting
TS-0301-3002	eB2 Re-loom System
TS-0301-3003	eB2 and eBS Solenoid System
TS-0301-3005	eB2 60mm Replacement Head Unit
TS-0301-3006	eB2 66mm Replacement Head Unit
TS-0302-2001	eBS Mounting Bracket
TS-0302-3002	eBS40 Re-Loom System
TS-0302-3005	eBS Head Unit Replacement

EB2 DASHMOUNT SYSTEM

ROLL CAGE MOUNT SYSTEM

GAUGES - BOOST, EGT, TRANS TEMP

Turbosmart's new, expanded range of gauges provide access to important information in a stylish, easy-to-read format that looks good in any interior.

With bright backlit illumination and timeless white on black colour scheme with a silver bezel, Turbosmart's interior gauges are available in a variety of applications, both mechanical and electronic.

ELECTRONIC GAUGES

Our new range of electronic stepper motor-controlled gauges for turbo diesel vehicles includes Exhaust Gas Temperature (EGT), transmission temperature and electronic boost gauges. These gauges are a complete standalone solution, with everything you need to obtain this information from your vehicle - including thermocouples for EGT and transmission temperature gauges, and electronic boost gauges.

ELECTRICAL GAUGES PART NUMBERS	
TS-0701-1011	30PSI Boost Only gauge
TS-0701-1012	60PSI Boost Only gauge
TS-0701-1013	4 Bar Boost Only gauge
TS-0701-3011	Transmission Temperature gauge - Fahrenheit
TS-0701-2011	Exhaust Gas Temperature gauge - Fahrenheit
TS-0740-0002	L Bracket 3 gauge mount

TS-0701-1012

TS-0701-1013

TS-0701-1011 TS-0701-3011 TS-0701-2011

MECHANICAL BOOST GAUGES

A Turbosmart mechanical boost pressure gauge is the perfect accompaniment to a Turbosmart manual boost controller. Available in both PSI and bar, Turbosmart's mechanical boost gauges are a simple and reliable way to monitor boost pressure.

MECHANICAL GAUGE PART NUMBERS	
TS-0101-2023	Boost gauge 0-30PSI 52mm
TS-0101-2025	Boost gauge 0-2 Bar 52mm
TS-0101-2024	Boost gauge mounting cup 52mm

TS-0101-2025

TS-0101-2023

TS-0101-2024

BOOST REFERENCE ADAPTERS

Many popular modern turbocharged vehicles are incompatible with traditional vacuum-operated accessories, due to the lack of an accessible vacuum source to tap into.

Turbosmart's BRA kit gives the vehicle a boost reference source, and is a must for anyone planning to add a Blow-Off Valve, mechanical boost gauge or other vacuum-operated accessories to such a vehicle.

Turbosmart's Boost Reference Adapter kits include everything you need to reliably obtain a boost reference from a wide range of vehicles. For vehicle specific applications, please refer to fitment guide.

BOOST REFERENCE ADAPTER PART NUMBERS	
TS-0720-1001	Ford Ranger/Mazda BT50 Diesel 2.2/L3.2L
TS-0720-1002	VW Golf GTI MK5/6
TS-0720-1003	Ford Fiesta Ecoboost 1.6L 2015-current/Ford Ranger Ecoboost
TS-0720-1004	Ford Mustang Ecoboost 2015-current/ Ford F150 2.7 Ecoboost
TS-0720-1005	Ford F150 2013-2016 Ecoboost
TS-0720-1006	Mini Cooper/S R56/ Renault Clio RS
TS-0720-1007	Mercedes Benz AMG A45 2013-07.2016
TS-0720-1008	Nissan TD42T/ZD30DDTi Engine
TS-0720-1010	VW Golf GTI/R MK7

TS-0720-1001

TS-0720-1002

TS-0720-1003

TS-0720-1004

TS-0720-1005

TS-0720-1006

TS-0720-1008

TS-0720-1010

WHAT IS FUEL CUT?

Fuel cut is a factory safeguard against boost spikes and boost creep. When the factory ECU senses an increase in boost pressure over a specified fuel cut-out level, it triggers a momentary shutdown of the fuel injectors in order to save the engine from damage.

WHAT DOES A FUEL CUT DEFENDER DO?

A fuel cut defender raises the fuel cut-out level, allowing you - through the use of a Turbosmart boost controller - to increase boost pressure without the ECU triggering the fuel injector shutdown.

FCD-1 (PNEUMATIC)

- Suited to most cars using a manifold absolute pressure (MAP) sensor
- Allows an accurate increase in the factory fuel cut-out level
- No need to cut/splice wires
- Does not affect off-boost conditions
- Can be locked to prevent tampering

FCD-2 (ELECTRONIC)

- Suited to most cars using an Air Flow Meter (AFM)
- Allows an accurate increase in the factory fuel cut-out level
- Features LED indicators for easy set-up
- Adjustable release feature ensures you set your own fuel cut-out level to protect your engine from over-boosting

FCD-1 (PNEUMATIC)

FUEL CUT DEFENDER PART NUMBERS	
TS-0303-1001	Fuel Cut Defender FCD-1 (pneumatic)
TS-0303-1002	Fuel Cut Defender FCD-2 (electronic)

TURBO OIL PRESSURE REGULATOR (OPR)

PATENT PENDING

Turbosmart's new patent pending OPR T40 is an oil pressure regulation system for your turbocharger.

The oil pressure regulator ensures the oil pressure going to the turbocharger never exceeds the maximum pressure turbocharger manufacturers specify for oil supply, regardless of engine oil pressure.

The result is an oil delivery system that is more reliable and easier to setup than a standard restrictor system, especially when combined with Turbosmart's new range of turbo oil fittings and filters.

TURBO OIL PRESSURE REGULATOR PART NUMBERS	
TS-0801-1001	OPR T40 40psi - Blue
TS-0801-1002	OPR T40 40psi - Black
TS-0802-1001	OPR -4AN Fitting Kit

TS-0802-1001

TS-0802-1002

TS-0802-1001

TURBO OIL FEED FILTERS AND DRAIN ADAPTERS

Turbosmart's turbo oil feed filters make sure your turbo is always fed with clean oil. With small oil galleries, it's highly important for the turbocharger to avoid any debris that may become dislodged from the engine, and a 44 micron filter element ensures even the smallest particles are kept away from the turbo. The perfect combination with Turbosmart's new Turbo Oil Pressure Regulator, the oil feed filters are available two fitting sizes, -3AN and -4AN. Turbosmart's hard anodized billet turbo oil drain flange adapters offer a reliable plug-and-play solution to fit the turbocharger's oil drain to a -8AN or -10AN fitting.

TURBO OIL FEED FILTERS PART NUMBERS	
TS-0804-1001	Billet Turbo Oil Feed Filter 44um AN-3 - Black
TS-0804-1002	Billet Turbo Oil Feed Filter 44um AN-4 - Black
TS-0804-1003	Billet Turbo Oil Feed Filter 44um AN-4 to AN-4 ORB - Black

TS-0804-1002

TS-0804-1001

TS-0804-1003

TS-0804-1020

TS-0804-1021

BILLET TURBO DRAIN ADAPTERS PART NUMBERS	
TS-0804-1010	Billet Turbo Drain Adapter 38-44mm slotted UNL small frame
TS-0804-1011	Billet Turbo Drain Adapter 52mm T3/T4 Frame
TS-0804-1012	Billet Turbo Drain Adapter 52.4mm Large Frame Uni
TS-0804-1020	Billet Turbo Drain 70mm Extension -8 MALE to -8 PORT
TS-0804-1021	Billet Turbo Drain 70mm Extension -10 MALE to -10 PORT

TS-0804-1012

TS-0804-1011

TS-0804-1010

STRAIGHT HOSE

WHY UPGRADE TO SILICONE?

Turbosmart silicone hoses are:

- Manufactured from a high-grade silicone
- Stronger, tougher and more flexible than rubber hoses
- Temperature resistant from -50°C (-58°F) to 170°C (338°F) constant
- Available in a wide range of styles and diameters
- Available in Blue and in Black

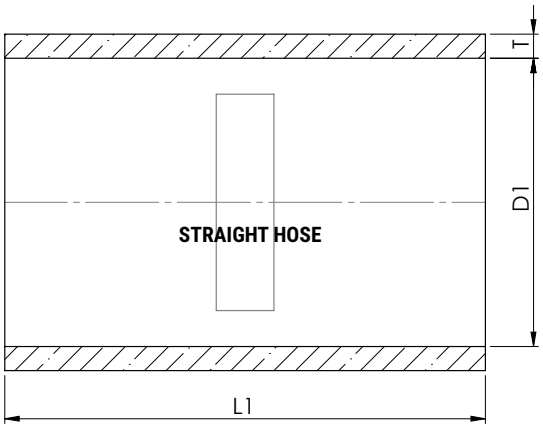

STRAIGHT HOSE - PRECUT LENGTHS

PART # BLUE	PART # BLACK	D1	L1	PLY	T
TS-HS100060-BE	TS-HS100060-BK	1.00" (25mm)	2.375" (60mm)	3	4.5mm
TS-HS110060-BE	TS-HS110060-BK	1.10" (28mm)	2.375" (60mm)	3	4.5mm
TS-HS125060-BE	TS-HS125060-BK	1.25" (32mm)	2.375" (60mm)	3	4.5mm
TS-HS150060-BE	TS-HS150060-BK	1.50" (38mm)	2.375" (60mm)	3	4.5mm
TS-HS175060-BE	TS-HS175060-BK	1.75" (45mm)	2.375" (60mm)	3	4.5mm
TS-HS200075-BE	TS-HS200075-BK	2.00" (50mm)	3.00" (75mm)	3	4.5mm
TS-HS225075-BE	TS-HS225075-BK	2.25" (57mm)	3.00" (75mm)	4	5mm
TS-HS236075-BE	TS-HS236075-BK	2.36" (60mm)	3.00" (75mm)	4	5mm
TS-HS250075-BE	TS-HS250075-BK	2.50" (63mm)	3.00" (75mm)	4	5mm
TS- HS275075-BE	TS- HS275075-BK	2.75" (70mm)	3.00" (75mm)	4	5mm
TS-HS300075-BE	TS-HS300075-BK	3.00" (75mm)	3.00" (75mm)	4	5mm
TS-HS325090-BE	TS-HS325090-BK	3.25" (83mm)	3.50" (90mm)	4	5mm
TS-HS350090-BE	TS-HS350090-BK	3.50" (89mm)	3.50" (90mm)	4	5mm
TS-HS375090-BE	TS-HS375090-BK	3.75" (95mm)	3.50" (90mm)	4	5mm
TS-HS400090-BE	TS-HS400090-BK	4.00" (102mm)	3.50" (90mm)	4	5mm

STRAIGHT HOSE - FULL LENGTHS

PART # BLUE	PART # BLACK	D1	L1	PLY	T
TS-HS100610-BE	TS-HS100610-BK	1.00" (25mm)	2' (610mm)	3	4.5mm
TS-HS110610-BE	TS-HS110610-BK	1.10" (28mm)	2' (610mm)	3	4.5mm
TS-HS125610-BE	TS-HS125610-BK	1.25" (32mm)	2' (610mm)	3	4.5mm
TS-HS150610-BE	TS-HS150610-BK	1.50" (38mm)	2' (610mm)	3	4.5mm
TS-HS175610-BE	TS-HS175610-BK	1.75" (45mm)	2' (610mm)	3	4.5mm
TS-HS200610-BE	TS-HS200610-BK	2.00" (50mm)	2' (610mm)	3	4.5mm
TS-HS225610-BE	TS-HS225610-BK	2.25" (57mm)	2' (610mm)	4	5mm
TS-HS250610-BE	TS-HS250610-BK	2.50" (63mm)	2' (610mm)	4	5mm
TS- HS275610-BE	TS- HS275610-BK	2.75" (70mm)	2' (610mm)	4	5mm
TS-HS300610-BE	TS-HS300610-BK	3.00" (75mm)	2' (610mm)	4	5mm
TS-HS325610-BE	TS-HS325610-BK	3.25" (83mm)	2' (610mm)	4	5mm
TS-HS350610-BE	TS-HS350610-BK	3.50" (89mm)	2' (610mm)	4	5mm
TS-HS375610-BE	TS-HS375610-BK	3.75" (95mm)	2' (610mm)	4	5mm
TS-HS400610-BE	TS-HS400610-BK	4.00" (102mm)	2' (610mm)	4	5mm

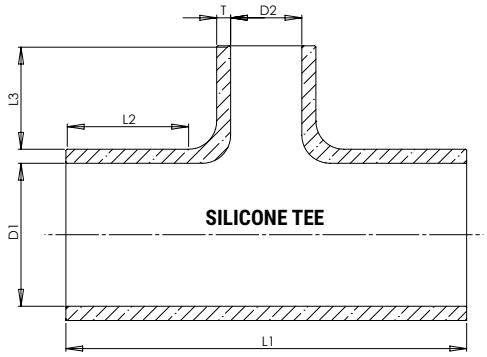

SILICONE TEE

SILICONE TEES

PART # BLUE	PART # BLACK	D1	D2	L1	L2	L3	PLY	T
TS-HT200100-BE		2.00" (50.8mm)	1.00" (25mm)	143mm	44mm	37mm	4	5mm
TS-HT200150-BE	TS-HT200150-BK	2.00" (50.8mm)	1.50" (38.1mm)	143mm	38mm	37mm	4	5mm
TS-HT225150-BE	TS-HT225150-BK	2.25" (57.1mm)	1.50" (38.1mm)	143mm	38mm	37mm	4	5mm
TS-HT250100-BE		2.50" (63.5mm)	1.00" (25mm)	143mm	44mm	37mm	4	5mm
TS-HT250150-BE	TS-HT250150-BK	2.50" (63.5mm)	1.50" (38.1mm)	143mm	38mm	37mm	4	5mm
TS-HT275150-BE	TS-HT275150-BK	2.75" (69.9mm)	1.50" (38.1mm)	143mm	38mm	37mm	4	5mm
TS-HT300150-BE	TS-HT300150-BK	3.00" (76.2mm)	1.50" (38.1mm)	158mm	45mm	38mm	4	5mm

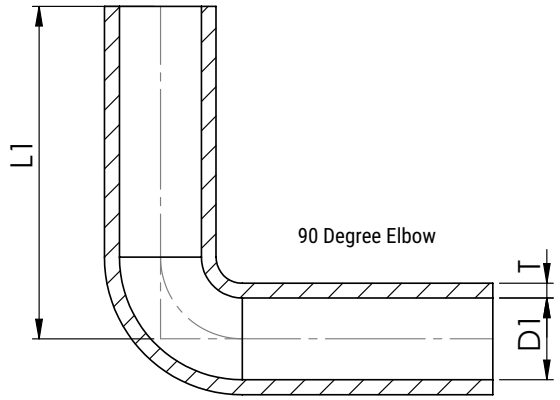

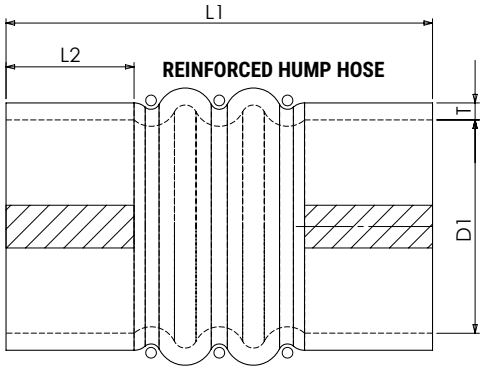

90 DEGREE ELBOWS

PART # BLUE	PART # BLACK	D1	L1	PLY	T
TS-HE90100-BE	TS-HE90100-BK	1.00" (25.4mm)	102mm	4	4.5mm
TS-HE90125-BE	TS-HE90125-BK	1.25" (31.75mm)	102mm	4	4.5mm
TS-HE90150-BE	TS-HE90150-BK	1.50" (38.1mm)	102mm	4	4.5mm
TS-HE90175-BE	TS-HE90175-BK	1.75" (44.5mm)	102mm	4	4.5mm
TS-HE90200-BE	TS-HE90200-BK	2.00" (50.8mm)	102mm	4	4.5mm
TS-HE90225-BE	TS-HE90225-BK	2.25" (57.1mm)	102mm	4	5mm
TS-HE90250-BE	TS-HE90250-BK	2.50" (63.5mm)	127mm	4	5mm
TS-HE90275-BE	TS-HE90275-BK	2.75" (69.9mm)	152mm	4	5mm
TS-HE90300-BE	TS-HE90300-BK	3.00" (76.2mm)	152mm	4	5mm
TS-HE90350-BE	TS-HE90350-BK	3.50" (88.9mm)	152mm	4	5mm
TS-HE90400-BE	TS-HE90400-BK	4.00" (101.6mm)	152mm	4	5mm

REINFORCED HUMP HOSES

PART # BLUE	PART # BLACK	D1	L1	L2	PLY	T
TS-HH200-BE	TS-HH200-BK	2.00" (50.8mm)	100mm	30mm	4	5mm
TS-HH225-BE	TS-HH225-BK	2.25" (57.1)mm)	114mm	35mm	4	5mm
TS-HH250-BE	TS-HH250-BK	2.50" (63.5mm)	126mm	37mm	4	5mm
TS-HH275-BE	TS-HH275-BK	2.75" (69.9mm)	140mm	40mm	4	5mm
TS-HH300-BE	TS-HH300-BK	3.00" (76.2mm)	152mm	45mm	4	5mm
TS-HH350-BE	TS-HH350-BK	3.50" (88.9mm)	178mm	55mm	4	5mm
TS-HH400-BE	TS-HH400-BK	4.00" (101.6mm)	204mm	60mm	4	5mm

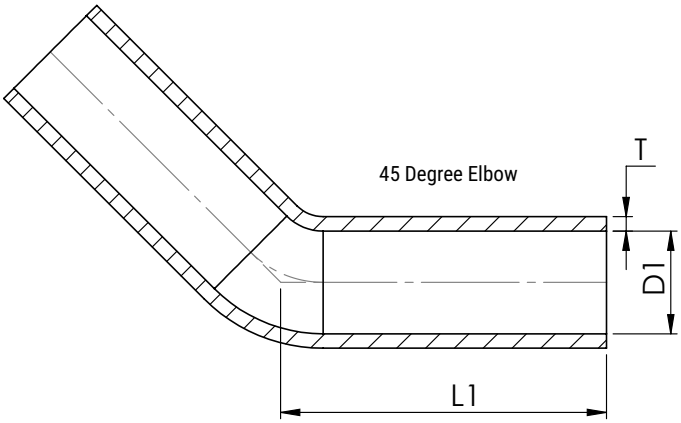

45 DEGREE ELBOWS

PART # BLUE	PART # BLACK	D1	L1	PLY	T
TS-HE45075-BE	TS-HE45075-BK	0.75" (19.05mm)	102mm	4	4.5mm
TS-HE45100-BE	TS-HE45100-BK	1.00" (25.4mm)	102mm	4	4.5mm
TS-HE45125-BE	TS-HE45125-BK	1.25" (31.75mm)	102mm	4	4.5mm
TS-HE45150-BE	TS-HE45150-BK	1.50" (38.1mm)	102mm	4	4.5mm
TS-HE45175-BE	TS-HE45175-BK	1.75" (44.45mm)	102mm	4	4.5mm
TS-HE45200-BE	TS-HE45200-BK	2.00" (50.8mm)	102mm	4	4.5mm
TS-HE45225-BE	TS-HE45225-BK	2.25" (57.1mm)	102mm	4	5mm
TS-HE45250-BE	TS-HE45250-BK	2.50" (63.5mm)	102mm	4	5mm
TS-HE45275-BE	TS-HE45275-BK	2.75" (69.9mm)	102mm	4	5mm
TS-HE45300-BE	TS-HE45300-BK	3.00" (76.2mm)	102mm	4	5mm
TS-HE45350-BE	TS-HE45350-BK	3.50" (88.9mm)	127mm	4	5mm
TS-HE45400-BE	TS-HE45400-BK	4.00" (101.6mm)	127mm	4	5mm

45 DEGREE ELBOWS

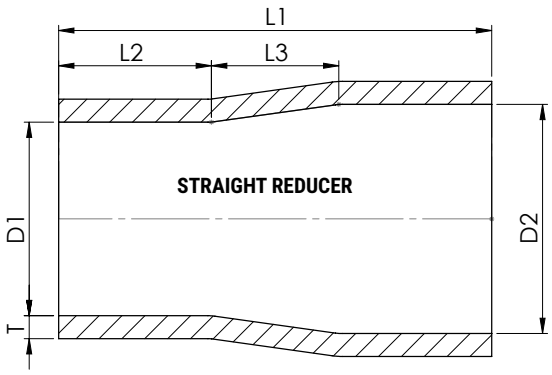

STRAIGHT REDUCER

STRAIGHT REDUCERS

PART # BLUE	PART # BLACK	D1	D2	L1	L2	L3	PLY	T
TS-HR125175-BE	TS-HR125175-BK	1.25" (31.75mm)	1.75" (44.45mm)	85mm	30mm	25mm	4	4.5mm
TS-HR150175-BE	TS-HR150175-BK	1.50" (38.1mm)	1.75" (44.45mm)	85mm	30mm	25mm	4	4.5mm
TS-HR150200-BE	TS-HR150200-BK	1.50" (38.1mm)	2.00" (50.8mm)	100mm	37mm	25mm	4	4.5mm
TS-HR175200-BE	TS-HR175200-BK	1.75" (44.45mm)	2.00" (50.8mm)	100mm	37mm	25mm	4	4.5mm
TS-HR175225-BE	TS-HR175225-BK	1.75" (44.45mm)	2.25" (57.1mm)	100mm	37mm	25mm	4	4.5mm
TS-HR175300-BE	TS-HR175300-BK	1.75" (44.45mm)	3.00" (76.2mm)	100mm	37mm	25mm	4	4.5mm
TS-HR200225-BE	TS-HR200225-BK	2.00" (50.8mm)	2.25" (57.1mm)	100mm	37mm	25mm	4	5mm
TS-HR200250-BE	TS-HR200250-BK	2.00" (50.8mm)	2.50" (63.5mm)	100mm	37mm	25mm	4	5mm
TS-HR200275-BE	TS-HR200275-BK	2.00" (50.8mm)	2.75" (69.9mm)	100mm	37mm	25mm	4	5mm
TS-HR200300-BE	TS-HR200300-BK	2.00" (50.8mm)	3.00" (76.2mm)	100mm	37mm	25mm	4	5mm
TS-HR200325-BE	TS-HR200325-BK	2.00" (50.8mm)	3.25" (82.5mm)	100mm	37mm	25mm	4	5mm
TS-HR225250-BE	TS-HR225250-BK	2.25" (57.1mm)	2.50" (63.5mm)	100mm	37mm	25mm	4	5mm
TS-HR225275-BE	TS-HR225275-BK	2.25" (57.1mm)	2.75" (69.9mm)	100mm	37mm	25mm	4	5mm
TS-HR225300-BE	TS-HR225300-BK	2.25" (57.1mm)	3.00" (76.2mm)	100mm	37mm	25mm	4	5mm
TS-HR250275-BE	TS-HR250275-BK	2.50" (63.5mm)	2.75" (69.9mm)	100mm	37mm	25mm	4	5mm
TS-HR250300-BE	TS-HR250300-BK	2.50" (63.5mm)	3.00" (76.2mm)	100mm	37mm	25mm	4	5mm
TS-HR250325-BE	TS-HR250325-BK	2.50" (63.5mm)	3.25" (82.5mm)	115mm	45mm	25mm	4	5mm
TS-HR275300-BE	TS-HR275300-BK	2.75" (69.9mm)	3.00" (76.2mm)	100mm	37mm	25mm	4	5mm
TS-HR275350-BE	TS-HR275350-BK	2.75" (69.9mm)	3.50" (88.9mm)	115mm	45mm	25mm	4	5mm
TS-HR300325-BE	TS-HR300325-BK	3.00" (76.2mm)	3.25" (82.5mm)	115mm	37mm	25mm	4	5mm
TS-HR300350-BE	TS-HR300350-BK	3.00" (76.2mm)	3.50" (88.9mm)	115mm	45mm	25mm	4	5mm
TS-HR300375-BE	TS-HR300375-BK	3.00" (76.2mm)	3.75" (95.25mm)	115mm	45mm	25mm	4	5mm
TS-HR300400-BE	TS-HR300400-BK	3.00" (76.2mm)	4.00" (101.6mm)	115mm	45mm	25mm	4	5mm
TS-HR325400-BE	TS-HR325400-BK	3.25" (82.5mm)	4.00" (101.6mm)	115mm	45mm	25mm	4	5mm
TS-HR350375-BE	TS-HR350375-BK	3.50" (88.9mm)	3.75" (95.25mm)	115mm	45mm	25mm	4	5mm
TS-HR350400-BE	TS-HR350400-BK	3.50" (88.9mm)	4.00" (101.6mm)	115mm	45mm	25mm	4	5mm

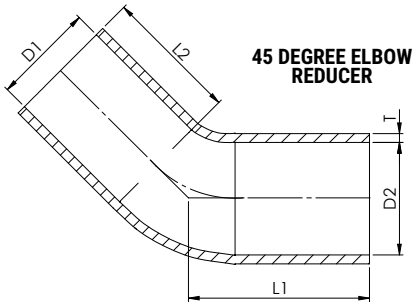

45 DEGREE ELBOW REDUCER

45 DEGREE ELBOW REDUCERS

PART # BLUE	PART # BLACK	D1	D2	L1	L2	PLY	T
TS-HRE2025-BE	TS-HRE2025-BK	2.00" (51mm)	2.50" (63mm)	80mm	100mm	4	5mm
TS-HRE42030-BE	TS-HRE42030-BK	2.00" (51mm)	3.00" (76mm)	90mm	90mm	4	5mm
TS-HRE42225-BE	TS-HRE42225-BK	2.25" (57.1mm)	2.50" (63.5mm)	102mm	75mm	4	5mm
TS-HRE4250275-BE	TS-HRE4250275-BK	2.50" (63mm)	2.75" (70mm)	75mm	85mm	4	5mm
TS-HRE42530-BE	TS-HRE42530-BK	2.50" (63mm)	3.00" (76mm)	85mm	95mm	4	5mm
TS-HRE4275300-BE	TS-HRE4275300-BK	2.75" (70mm)	3.00" (76mm)	80mm	95mm	4	5mm

90 DEGREE ELBOW REDUCERS

PART # BLUE	PART # BLACK	D1	D2	L1	L2	PLY	T
TS-HRE92025-BE	TS-HRE92025-BK	2.00" (50.8mm)	2.50" (63.5mm)	127mm	51mm	4	5mm
TS-HRE92030-BE	TS-HRE92030-BK	2.00" (50.8mm)	3.00" (76mm)	100mm	80mm	4	5mm
TS-HRE9250275-BE	TS-HRE9250275-BK	2.50" (63mm)	2.75" (70mm)	110mm	70mm	4	5mm
TS-HRE92530-BE	TS-HRE92530-BK	2.50" (63mm)	3.00" (76mm)	127mm	51mm	4	5mm
TS-HRE9275300-BE	TS-HRE9275300-BK	2.75" (70mm)	3.00" (76mm)	110mm	70mm	4	5mm

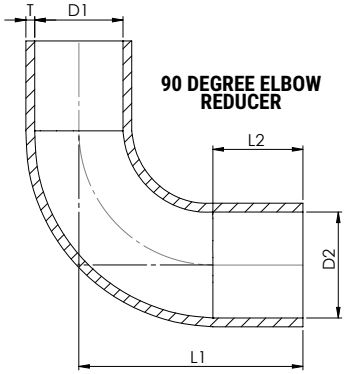

90 DEGREE ELBOW REDUCER

VACUUM HOSE

PART # BLUE	PART # BLACK	PART # RED	ID	OD	LENGTH
TS-HV0303-BE	TS-HV0303-BK	TS-HV0303-RD	3mm	8mm	3m
TS-HV0403-BE	TS-HV0403-BK	TS-HV0403-RD	4mm	9mm	3m
TS-HV0503-BE	TS-HV0503-BK	TS-HV0503-RD	5mm	10mm	3m
TS-HV0603-BE	TS-HV0603-BK	TS-HV0603-RD	6mm	11mm	3m

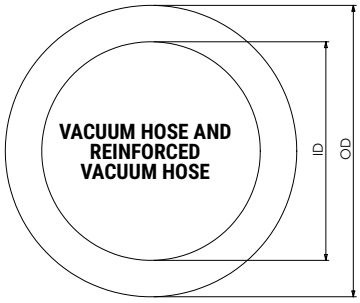

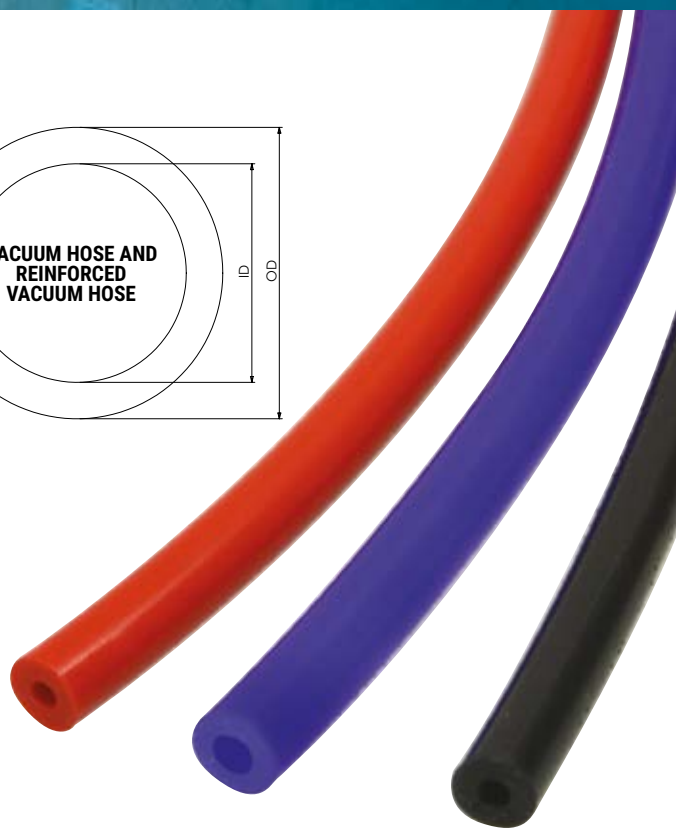

REINFORCED VACUUM HOSE

PART # BLUE	PART # BLACK	ID	OD	LENGTH
TS-HH06303-BE	TS-HH06303-BK	6.3mm	13mm	3m

CONSTANT
TENSION CLAMPS

MURRAY TURBO SEAL SERIES CONSTANT TENSION CLAMPS

Turbosmart stocks and recommends Murray Corporation Turbo Seal Series Stainless Steel Specialty Worm Drive Clamps.

CONSTANT TENSION CLAMPS (2 PER PACK)

PART NUMBER	DIAMETER (INCH)	DIAMETER (MM)
TS-HCT-M033	1.125-1.500”	(28-38mm)
TS-HCT-M042	1.375-1.875”	(35-48mm)
TS-HCT-M050	1.625-2.375”	(41-60mm)
TS-HCT-M062	1.970-2.875”	(50-73mm)
TS-HCT-M075	2.500-3.375”	(64-86mm)
TS-HCT-M081	2.750-3.625”	(70-92mm)
TS-HCT-M100	3.750-4.625”	(95-117.5mm)

SPRING CLAMPS (10 PER PACK)

PART NUMBER	SUITS VACUUM HOSE ID (INCH)	(MM)
TS-HCS-003	0.12”	(3mm)
TS-HCS-005	0.20”	(5mm)
TS-HCS-006	0.24”	(6mm)

HOSE BLANKING PLUGS

PART NUMBER	DIAMETER (INCH)	DIAMETER (MM)
TS-0205-2012	0.75”	(19mm)
TS-0205-2013	1.00”	(25mm)
TS-0205-2014	1.14”	(29mm)
TS-0205-2015	1.26”	(32mm)
TS-0205-2016	1.34”	(34mm)
TS-0205-2017	1.50”	(38mm)

HEAD OFFICE
Turbosmart Pty Ltd
478 Victoria St, Wetherill Park
New South Wales 2164 Australia
T: +61 2 9740 2866 F: +61 2 9798 2826
Email: sales@turbosmart.com.au

NORTH AMERICA
Turbosmart USA
2020 South Lynx Place
Ontario, CA 91761 USA
T: +1 909 476 2570 F: +1 909 476 2594
Email: sales@turbosmartusa.com

UNITED KINGDOM
Turbosmart UK
Unit 4, Wharton Street Industrial Estate,
Nechells, Birmingham, B7 5TR, UK
T: 0121 368 0719 F: 0121 535 7014
Email: sales@turbosmartuk.com